24-Bit Analog-to-Digital Converter (ADC) for Weigh Scales

DESCRIPTION

Based on Avia Semiconductor's patented technology, HX71708 is a precision 24-bit analog-to-digital converter (ADC) designed for high precision weigh scales and industrial control applications to interface directly with a bridge sensor.

The input low-noise amplifier (PGA) has a fixed gain of 128, corresponding to a full-scale differential input voltage of ±20mV, when a 5V reference voltage is connected to the VREF pin. On chip oscillator provides the system clock without any external component. On-chip power-on-reset circuitry simplifies digital interface initialization. There is no programming needed for the internal registers. All controls to the HX71708 are through the pins.

FEATURES

- **On-chip low noise amplifier with a gain of 128**
- **On-chip oscillator requiring no external component**
- **On-chip power-on-reset**
- **Simple digital control and serial interface: pin-driven controls, no programming needed**
- **Selectable 10, 20, 80 or 320SPS output data rate**
- **Simultaneous 50 and 60Hz supply rejection**
- **Current consumption: normal operation < 1.5mA, power down < 1uA**
- **Operation supply voltage range: 2.7 ~ 5.5V**
- **Operation temperature range: -40 ~ +85℃**
- **8 pin SOP-8 package**

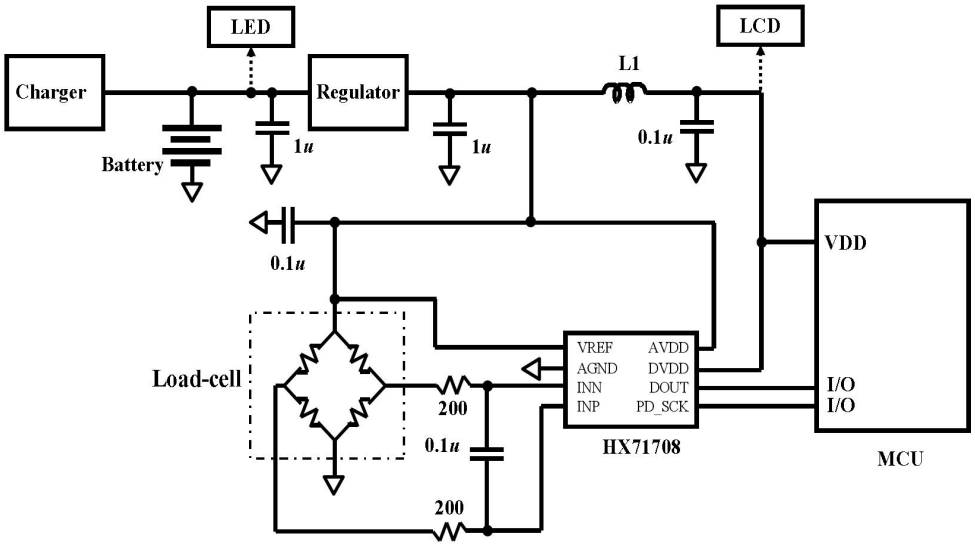

Fig. 1 Typical weigh scale application using HX71708

Information contained in this document is for design reference only and not a guarantee. Avia Semiconductor reserves the right to modify it without notice.